The Active Cooling for Multispectral Earth Sensors (ACMES) Mission

Charles Swenson[(1)], Lucas Anderson[(1,2)], Chad Fish[(2)], Bruno Mattos[(1)], Robert Wright[(3)], Mark Schoeberl[(4)]

[(1)] Utah State University, 4170 Old Main Hill, Logan Utah 84322; +1-435-797-2958, Charles.Swenson@usu.edu

[(2)] Orion Space Solutions,282 Century Place, #1000, Louisville, Colorado 80027; +1-303-993-8039, Lucas.Anderson@orionspace.com

[(3)] Hawaii Institute of Geophysics & Planetology, University of Hawaii at Manoa, Honolulu, HI; +1-808-956-8760, wright@higp.hawaii.edu

[(4)] Science and Technology Corporation, 10015 Old Columbia Road, Suite E-250, Columbia, MD, 21046; +1-410-464-8689, schoeberl@stcnet.com

ABSTRACT

The Active Cooling for Multispectral Earth Sensors (ACMES) is a 12U CubeSat mission selected for flight under the In-space Validation of Earth Science Technologies (InVEST) Program in support of the NASA Science Mission Directorate. The NASA InVEST Program validates new technologies in space prior to use in future Earth science missions. ACMES will simultaneously validate two new technologies, each representing an important advance in satellite remote sensing capability for Earth science. The first technology is the Active Thermal Architecture (ATA); a complete end-to-end solution for active thermal control of cryogenic instruments on nano satellites. The second technology is the Hyperspectral Thermal Imager (HyTI), that captures both high spectral and spatial long-wave infrared images using a spatially modulated interferometric imaging technique. ATA will be used to manage the cryogenic thermal environment for HyTI allowing continuous operations over land. ACMES also includes two student technology demonstrations, the Filter Incidence Narrow-band Infrared Spectrometer (FINIS) and the Planer Langmuir/Impedance Diagnostic (PLAID). FINIS is a highly sensitive instrument for detection of methane while PLAID is a novel low-impact high precision instrument for observing both the space environment and spacecraft charging. The ACMES mission is being led by Utah State University and implemented by Orion Space Solutions with a delivery for launch in 2024.

1 INTRODUCTION

CubeSat cryogenic technology has been enabled by the development of miniature Stirling and pulse tube cryocoolers. These devices weigh about 400g and have lifetimes exceeding two years [1]. Cryogenic, optical instruments operating in the medium wavelength infrared (MWIR) and especially the long wavelength infrared (LWIR) require a mechanical cryocooler to cool their focal plane detectors and key optical components to operational values. Eliminating the cryocooler waste heat on a CubeSat using only passive techniques is challenging. The waste heat of the 10-to-30-watt cryocooler and the relatively small volume in which it is produced along with the limited surface area of the CubeSat has resulted in mission concepts in which the instrument can only be operated ~2% of the time. These thermal difficulties were encountered during demonstration missions of the NASA In-space Validation of Earth Science Technologies (InVEST) Program. The NASA InVEST Program, part of the Earth Science Technology Office, validates new technologies in space prior to use in future Earth science missions. Both the University of Hawaii HyTI and the JPL CIRAS InVEST missions as well as concept studies for the JPL EON-IR mission made use of miniature cryocoolers in support of LWIR instrumentation. These CubeSat programs have shown that the LEO

environment is generally too warm for traditional passive conduction and surface radiator approaches given the power and thermal demands created by the cryocooler and LWIR instrument. Constraining the instrument operating time is acceptable for an instrument concept demonstration but is not acceptable for a science mission where the goal is to operate nearly continuously [2,3].

The ACMES mission was selected for flight under the InVEST program in support of the NASA Science Mission Directorate to demonstrate thermal control technologies for high power CubeSats. The goals and objectives for the ACMES mission are:

Primary Goal: Enable the operation of cryogenic optical instruments on CubeSats.

- Demonstrate the Active Thermal Architecture (ATA) technology in the space environment.
- Demonstrate on-orbit the active thermal control of a cryogenic instrument.
- Demonstrate on-orbit the thermal control of a high-power CubeSat.

Secondary Goal: Provide LWIR observations of the Earth's surface.

- Effectively operate a multispectral sensor as if it were part of a scientific mission to observe the land masses of the Earth for one year.
- Demonstrate the effectiveness of non-mechanical scanning multispectral sensor technology.

Tertiary Goal 3.0: Create opportunities for students to contribute to NASA's work in exploration and science.

- Provide work and research experiences that enable students to contribute to the ACMES mission.
- Inspire students to contribute to NASA's work in exploration and science.

The ACMES mission will be implemented using a 12U CubeSat as illustrated in Figure 1. The ACMES mission will demonstrate a miniature pumped fluid loop, called Active Thermal Architecture (ATA), to address the engineering difficulties of high-power payloads on CubeSats. ATA will be used to maintain the operational temperature for a second generation HYTI cryogenic hyperspectral imager. The waste heat of the mechanical cryocooler is removed with a pumped fluid loop to an external radiator. The development of the ATA miniature pumped fluid loop has been the subject of continued research for over five years by Utah State University and NASA JPL under grants from the NASA Small Spacecraft Technology Program to mature the technology [10,12,15]. The ATA approach of heat lifting by a combined active thermal system and a cryocooler supports a diverse set of scenarios of future cryogenic instrumentation on CubeSats.

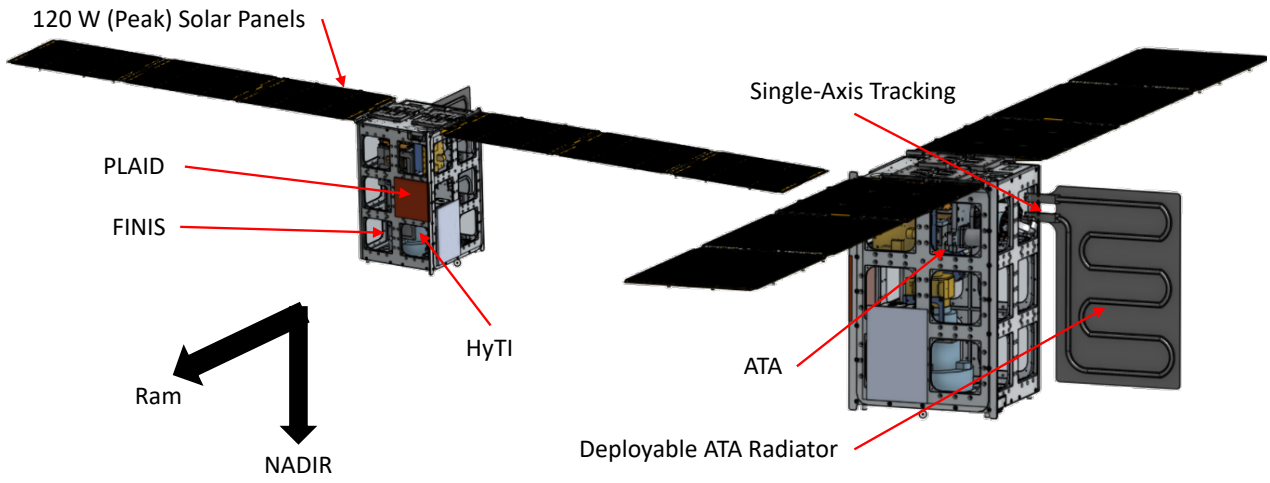

Figure 1 A conceptual drawing of the Active Cooling for Multispectral Earth Sensors spacecraft. The mission is a technological demonstration of the Active Thermal Architecture consisting of a mechanically pumped fluid loop supporting the thermal control of the HyTI, FINIS, and PLAID experimental science instruments.

2 Active Thermal Control

ATA, see Figure 3, is a mechanically pumped fluid loop topology to support high power payloads and the bus-wide thermal management of CubeSat's and Small Satellites [9, 10]. The ATA utilizes a centrifugal micro-pump to circulate a low viscosity, single-phase, thermal heat transfer fluid between an internal heat exchanger and an external deployable (tracking) radiator. The ATA integrates as a 1/2U subsystem internal to the spacecraft and leverages modern advanced fabrication techniques such as 3D ultrasonic additive manufacturing to embed the working fluid channels directly into the heat exchanger and external radiator, See Figure 2. The additive manufacturing helps to miniaturize and

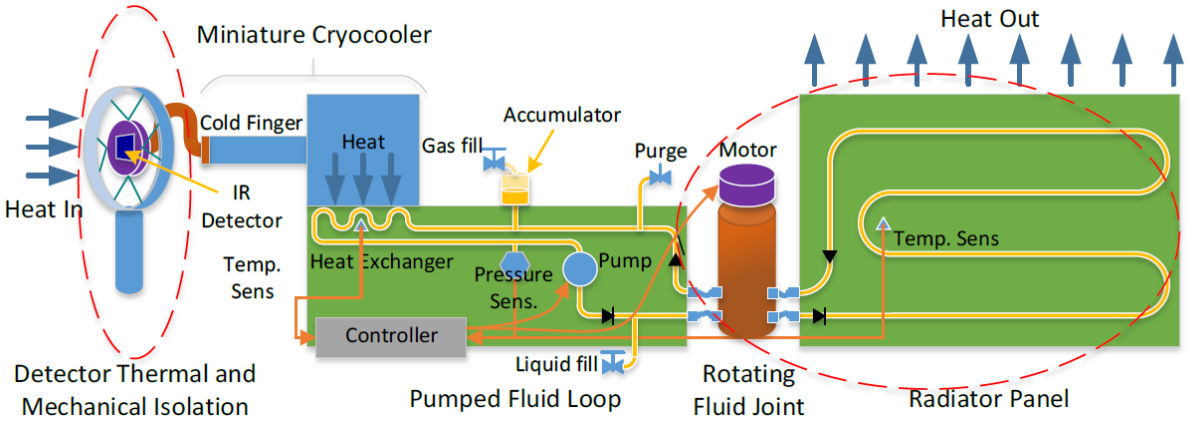

Figure 3 A concept of operations diagram for the Active Thermal Architecture supporting a miniature cryocooler.

simplify the ATA flow paths and greatly improves the thermal performance of ATA by eliminating joints within the pumped fluid loop [11]. The ATA relies on flow throttling (variable convective heat transfer) to actively control the internal temperatures of the satellite. A tuned PID controller dynamically varies the flow rate and sets the angle of the deployed radiator to maximize the dissipated thermal power and maintain the heat exchanger setpoint temperature [12]. An integrated guard-heater is used to supplement power and keep the ATA system warm during cold biased operations. The ATA's mechanically pumped fluid loop creates a direct high-efficiency, high-conductivity pathway between the satellite and the external radiator. Miniaturized fluid loops like the ATA system maximize heat transfer and isothermality, while providing a flexible and controllable method of satellite thermal control and management.

The heart of the ATA system is the TCS M510 micro-pump. The M510 is a long life, low power, high flow centrifugal pump. It is based on a can design, meaning that the M510 does not have any dynamic seals. This greatly improves the vacuum compatibility, performance and life of the pump. The M510 provides flow rates between 100 and 400 mL/min at powers less than 3 W. The ATA features a miniaturized custom rotary fluid joint & hinge assembly in a two-axis design. A continuous rotary union and a geared micro-motor allow for continuous rotation and tracking of the deployed radiator, while

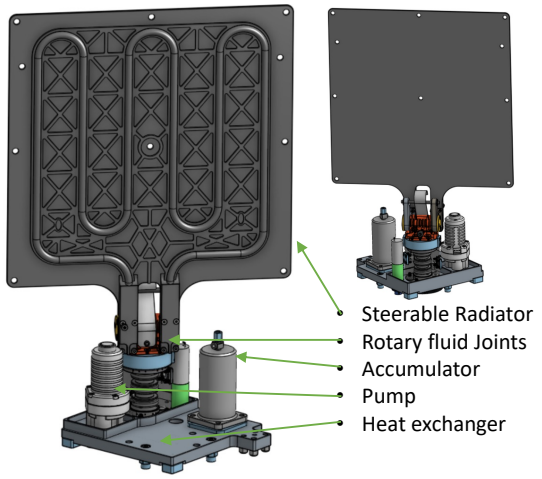

Figure 2 A CAD model of an Active Thermal Architecture mechanically pumped fluid loop integrated heat exchanger and external radiator.

a second fluid hinge coupled with a contorque spring deployment mechanism allow for one time deployment of the radiator away from the surface as needed. These two technologies can be mixed & matched to form a variety of dynamic systems including two-axis tracking, foldable radiators, and door-hinged radiator designs. Figure 4 shows an ATA two-axis rotary fluid joint/hinge. The ATA requires a dedicated gas accumulator. The accumulator compensates for thermal expansion/contraction of the working fluid and provides a reservoir for long-term fluid losses. The ATA accumulator is a sealed piston design with a nitrogen gas pre-charge which is matched to the volume and temperature requirements of ATA application. The ATA system features both static and dynamic soft O-ring seals. These seals offer the advantages of compact design and rapid fabrication, as well as dynamic movement. However, careful design and operation is required to seal failures and eliminate leaks. The ATA system has been General Environmental Verification Specification (GEVS) and helium leak tested to better than e^{-9} atm cc/sec. The ATA working fluid is 3M's Novec 7000. A low viscosity, thermally stable dielectric heat transfer fluid. N7000 is a non-toxic, safe fluid, and has a low-ozone depletion potential, which makes it an ideal replacement for traditional heat transfer fluids [13, 14, 15].

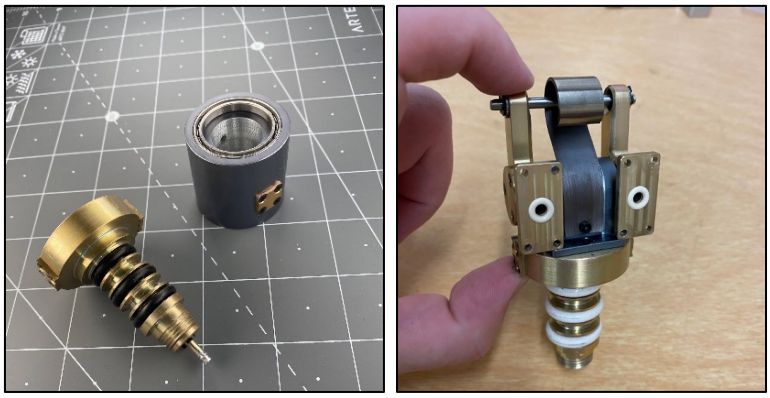

Figure 4 The compact ATA rotary fluid joint (Left) and (Right) a secondary axis fluid joint with a contorque spring deployment mechanism mounted above the rotary joint.

The ATA makes use of Ultrasonic Additive Manufacturing (UAM) which is a fabrication technique that uses sequential layers of metallic tape to create 3D structures. An ultrasonic weld head scrubs the layered tape surfaces to the base material. Ultrasonic vibration causes direct material shearing, plastic deformation, and interface diffusion/recrystallization which causes a true contact solid-state atomic bond to form. This process is low temperature and is uniquely suited for creating internal voids and embedding flow channels directly into metallic media as illustrated in Figure 5 [16]. UAM is key to the customization of ATA to meet the specific mechanical interfaces required for the ACMES sensors.

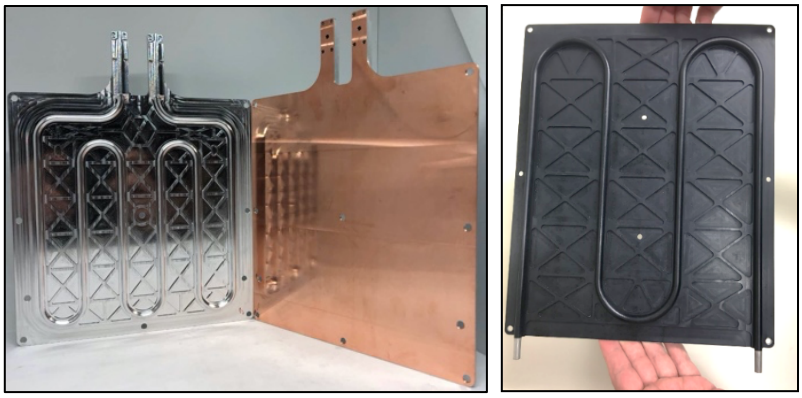

Figure 5 Ultrasonic Additive Manufacturing 3D printed aluminum radiators 4U (left), and 6U (right). Mixed metal designs are possible as can be seen by the copper backed aluminum radiator left.

3 HYTI Sensor

The Hyperspectral Thermal Imager (HyTI) is both a LWIR sensor and a mission, funded by NASA's InVEST program at University of Hawaii at Manoa. The 6U mission hosting the first-generation

sensor is planned for an August 2022 launch from the ISS. HyTI will demonstrate a spatially modulated interferometric imaging technique to produce spectro-radiometrically calibrated image cubes, with 25 channels between 8-10.7 ųm, at a ground sample distance of ~60 m. The performance model for HyTI indicates narrow band NEΔTs of <150 mK [3]. The 3U compact form factor of HyTI, shown in Figure 6, is made possible via the use of a no-moving-parts Fabry-Perot interferometer, and JPL's BIRD FPA technology. The second-generation HyTI sensor for ACMES will include a higher density BIRD FPA and larger optics to provide a ~45 m ground sampling distance. HyTI will be focused on SO_2 emissions that serve as early warnings of impending volcanic eruptions, agricultural applications, and atmospheric methane. These kinds of applications require high spatial and spectral resolution thermal infrared imagery to provide both the detection and quantification of atmospheric gases. HyTI has the potential to greatly advance our ability to study multiple Earth system processes such as crop health and water usage assessments.

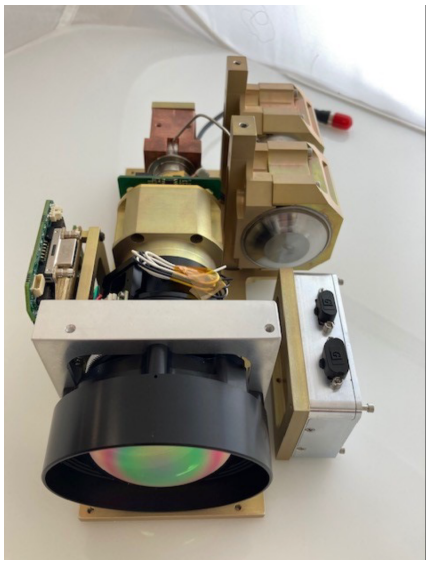

Figure 6 The first-generation HyTI LWIR Instrument.

HyTI includes an instrument data processing unit based on the iX5-100 heterogeneous architecture (CPU, GPU, FPGA) for the collection and on-board data processing of the camera sensor data. The iX5-100 occupies approximately a 1/2 U volume and provides HyTI with data transfer from the JPL Bird FPA, data storage and data processing. The iX5-100 consumes approximately 20 W while processing approximately 464 megabits per second (Mbps) of real-time data from the sensor [3].

4 The ACMES Satellite

The ACMES spacecraft and thermal architecture are in the preliminary design phase with the spacecraft concept shown in Figure 1. The driving requirement is for ATA to *provide 35W of cooling at the HyTI interface while maintaining a temperature of at least 30C.* ACMES is to be placed in a sun synchronous orbit at 550 km altitude with an ascending node local time of between 10:00 and 12:00. The spacecraft will deploy one axis sun tracking solar panels to each side which are perpendicular to the orbital plane providing ~120 W of instantaneous power. This orbit will provide ~4 years of operational mission life above 400 km and a local time drift of the ascending node of ~2 hours. The team is carrying out trade studies to optimize the thermal efficiency of the system. The objective of these trade studies is to increase heat transfer, while concurrently reducing the overall size and thickness of the thermal radiator.

The spacecraft bus leverages heritage Orion Space Solutions (OSS) components and the modular design approach for the 12U design for this mission. All major subsystems will be selected based on trade studies surveying TRL and OSS' prior usage and applicability to this mission-specific configuration.
22). The spacecraft will be operated out of OSS using the KSATlite ground network. Science operations centers will be located at Utah State University and University of Hawaii at Manoa.

5 ACMES Educational Outreach

The ACMES educational element is comprised of both class work and two student instrument technology demonstrations coupled with a scientific investigation using both hyperspectral instruments. The Space Systems Engineering degree at Utah State University is designed to provide

early- and mid-career professionals with post-graduate education and an opportunity to develop an understanding of system engineering from the perspective of the space engineering discipline. One of the key courses in this program is *Space System Design* where students in teams perform a space system design involving all aspects, including technical, cost, and schedule. The conceptual mission design is driven by an external customer who provides goals and objective and payload information. The Spring 2022 semester course used ACMES as the design project where 25 students worked with professionals from USU and Orion Space Solutions in developing the ACMES preliminary design. The student technology demonstration projects are the Filter Incidence Narrow-band Infrared Spectrometer (FINIS) and the Planer Langmuir/Impedance Diagnostic (PLAID). FINIS is a highly sensitive instrument for detection of methane that was originally developed by a student team funded through USRA in collaboration with NASA AMES. PLAID is a high precision instrument concept for observing both the space environment and spacecraft charging.

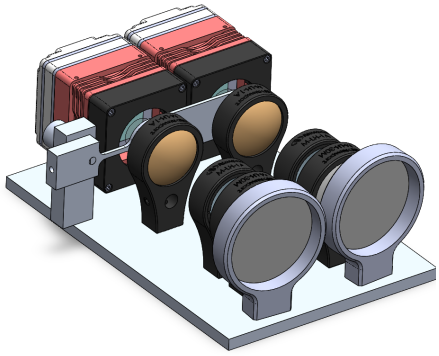

Figure 7 A conceptual diagram of the two FINIS instruments in a side-by-side configuration for ACMES.

5.1 FINIS Sensor

FINIS detects CH_4 in absorption from a solar illumined scene, see Figure 7. The brightness ratio is computed in bands where CH_4 is absorbing to bands where CH_4 is transmissive. The spectral bands are created by the incidence angle of light on a tilted interference filter and the view angle across the scene (reference Figure 8) FINIS effectively scans in wavelength along the methane absorption spectrum as the incidence angle of the light changes. Typically, an interference filter with a few nm bandwidths is difficult to work with due to wavelength de-tuning with incident angle. However, FINIS takes advantage of this property by purposefully tilting the filter in front of a detector such that the wavelength de-tuning is monotonically distributed across a focal plane array. The wavelength range is 1.660 to 1.666µm to

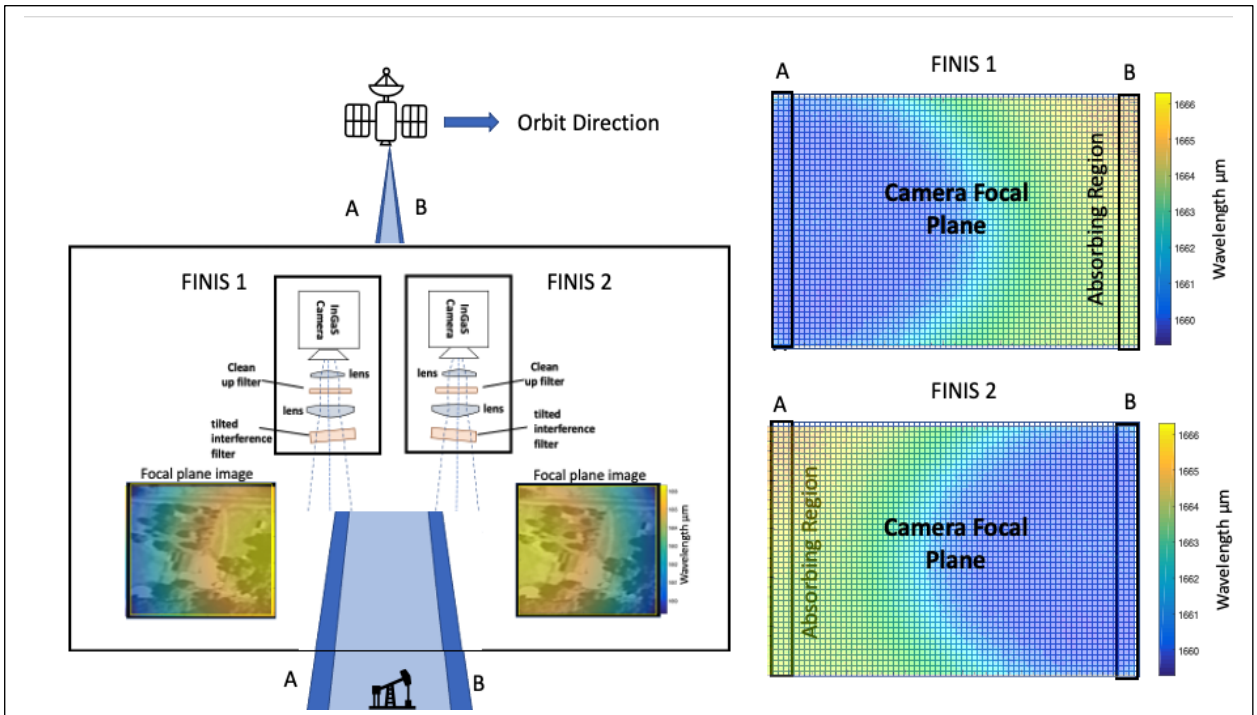

Figure 8 (Left side) The ACMES spacecraft contains two FINIS instruments that simultaneously observe the methane column at points A and B. (Right side) The FINIS focal plane spectrum map when viewing reflected sunlight through a column of methane. Methane has an absorption feature at 1.666 µm where the text indicates 'absorbing region', which produces the changes across the image.

capture both a transmission and a strong absorption band of CH_4. Unlike conventional spectrometers, FINIS has no moving parts and comparatively large photon throughput, while at the same time being very compact.

ACMES consists of two such imaging instruments with filters tilted in the reverse direction along the satellite's track (see Figure 7). This allows the instrument to image the same scenes at absorbing and non-absorbing wavelengths at the same instance of time. The CH_4 column concentration is retrieved using the absorption differences between the two images but at a higher signal to noise ratio (SNR) at the edges than at the center of the images. Data from the center is used for detecting anomalous absorption in the spectrum and for context information. A significant advantage of this approach is that absolute radiometric calibration is not necessary for this instrument, only camera flat fielding is required to maintain the relative sensitivity. The field of view is scanned across the Earth by the satellite's motion, thus capturing a series of overlapping images such that a ground location is sampled multiple times and at different SNR. The final measure of CH_4 at a ground location is computed from the SNR weighted average of all the overlapping data.

5.2 PLAID Sensor

The Planer Langmuir/Impedance Diagnostic (PLAID) is a demonstration of a RF impedance type probe for observing both the space environment and spacecraft charging using a planer surface type probe to be mounted on the ram surface of ACMES. This approach becomes a very low-impact sensor compared to previous approaches that used a deployed ridged boom. The impedance of an antenna at RF frequencies has been a basis of measurement of the ionosphere for over sixty years [17, 18, 19, 20]. The most common type of antenna studied, both in theory and in experiment, have been dipoles or monopoles which were electrically short relative to what would be the free space electromagnetic wavelength at the employed instrument driving frequencies. PLAID will extend the experimental technique to planer probes for the first time. At first order, the impedance as a function of frequency is only dependent on the average dielectric properties encompassed by the near field of the sensor. The driving voltage is kept small (10s of mV) to only perturb the surrounding electrons with energies that are slightly larger than their thermal potential. The system effectively behaves as if it were a capacitor, with ionospheric plasma as its dielectric. The capacitance of the antenna is then the product of its value in vacuum, called the free space capacitance, C_o, and the dielectric effect of the plasma integrated over the surface of the capacitor. The current flowing through the capacitor has resonances with signatures in both magnitude and phase in impedance vs frequency curves (See Figure 9). One is near the cyclotron frequency but shifted due to the capacitance of the plasma sheath around the sensor. The other is at the upper hybrid frequency, ω_{uh}^2. The lower frequency has characteristics of a series R-L-C type resonance, and when driven disturbs the local plasma. Thus, it is not desirable to excite the cyclotron-sheath resonance for electron diagnostic purposes. The upper frequency has characteristics of a high-Q parallel R-L-C resonance and is used as the electron diagnostic feature. The local magnetic field strength, B_o, determines the electron gyro frequency, $\Omega_e^2 = eB_o/m_e$. The electron density is determined from the plasma frequency $\omega_p^2 = \omega_{uh}^2 - \Omega_e^2$, where $\omega_p^2 = N_e e^2/m_e \varepsilon_o$.

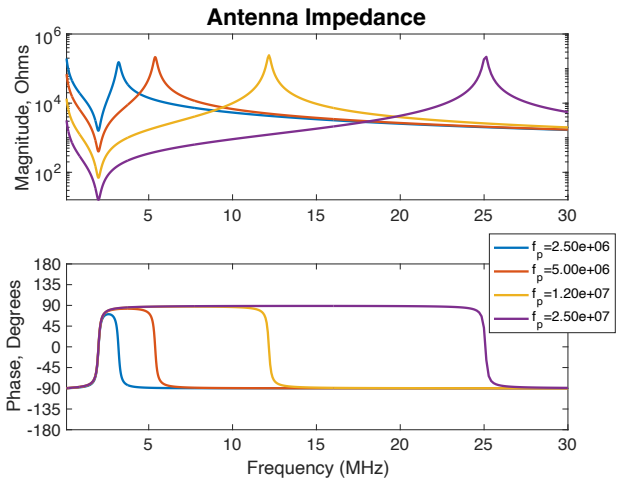

Figure 9 The resonant conditions of an impedance probe immersed in ionospheric plasma of different densities.

The PLAID sensor will be constructed such that a flat plate sensor is exposed to the ionospheric plasma and guarded such that shunt capacitance of the probe to the internals of the spacecraft is excluded. The fringing electric field of the flat plate will extend into the ram ionospheric plasma changing the impedance of the probe with plasma density. The DC potential of the planer impedance probe will be varied to explore the characteristics of the sensor under various plasma sheath conditions and a planer Langmuir probe as an additional diagnostic of electron density and spacecraft charge.

5.3 Scientific investigation

A science investigation is planned based on the availability of both the HyTI and the FINIS instrument data set. HyTI can estimate the total column of methane from the satellite to the surface of the earth through emission of CH_4 in the LWIR (7.5-8µm) band. The sensitivity to CH_4 near the surface of the earth, the boundary layer, is reduced by a factor of ~4 because of the free tropospheric methane overburden. The HyTI measurements will be sensitive to the free troposphere methane concentration, but insensitive to the surface abundance. The student FINIS sensor observes CH_4 in the 1.66 µm absorption band and the nearby gap in absorption is used to cleanly assess CH_4 concertation through differential absorption. The combination of the two-instruments observing simultaneously will allow a measurement of just the boundary layer concentration of CH_4 which is most valuable to understanding the anthropological source of methane in the atmosphere. The methane residual – formed by removing the LWIR measured free troposphere from the total column will significantly improve the estimation of methane in the lower troposphere. Worden et al. computed CH_4 residual and showed good results, see Figure 2, but his results suffered from the fact that the data was from GOSAT and TES which were neither coincident nor simultaneous and the footprints for both instruments were quite large (400 x 500 km) averaging and diluting localized emission features [21]. The methodology developed by Worden et al. follows the approach used in forming the ozone residual [22, 23]. ACMES will demonstrate this new technique using coincident and simultaneous high-resolution measurements.

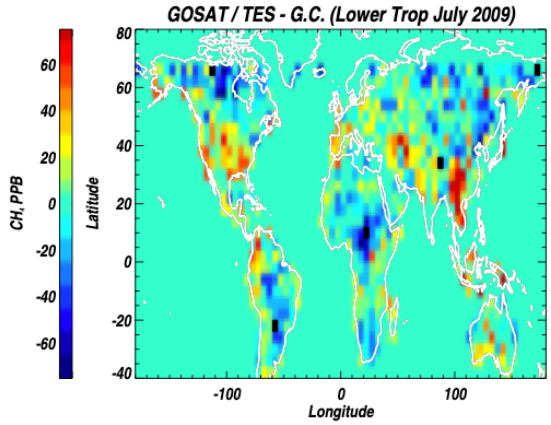

Figure 10 Methane boundary residual anomalies computed by combining GOSAT and TES [21]

6 Conclusion

The Active Cooling for Multispectral Earth Sensors (ACMES) is a 12U CubeSat mission to simultaneously validate two new technologies, each representing an important advance in satellite remote sensing capability for Earth science. The first technology is the Active Thermal Architectures (ATA); a complete end-to-end solution for active thermal control of cryogenic instruments on nano satellites, that can be scaled to accommodate a variety of form factors and mission power requirements. The second technology is the HyTI (Hyperspectral Thermal Imager), that captures both high spectral and spatial long-wave infrared images using a spatially modulated interferometric imaging technique. ATA will be used to manage the cryogenic thermal environment for HyTI allowing continuous operations over land. ACMES includes student outreach elements that are low impact to the primary mission. Both student projects are separable from the primary mission of ATA and HyTI.

7 References

[1] C. S. Kirkconnell, R. C. Hon, M. D. Perella, T. M. Crittenden, S. M. Ghiaasiaan, "Development of a miniature Stirling cryocooler for LWIR small satellite applications," Proc. SPIE 10180, Tri-Technology Device Refrigeration (TTDR) II, 1018002 (5 May 2017); https://doi.org/10.1117/12.2259803

[2] Thomas S. Pagano, Carlo Abesamis, Andres Andrade, Hartmut Aumann, Sarath Gunapala, Cate Heneghan, Robert Jarnot, Dean Johnson, Andy Lamborn, Yuki Maruyama, Sir Rafol, Nasrat Raouf, David Rider, Dave Ting, Dan Wilson, Karl Yee, Jerold Cole, Bill Good, Tom Kampe, Juancarlos Soto, Arn Adams, Matt Buckley, Richard Graham, Fred Nicol, Tony Vengel, John Moore, Thomas Coleman, Steve Schneider, Chris Esser, Scott Inlow, Devon Sanders, Karl Hansen, Matt Zeigler, Charles Dumont, Rebecca Walter, Joe Piacentine, "Technology development in support of hyperspectral infrared atmospheric sounding in a CubeSat," Proc. SPIE 10769, CubeSats and NanoSats for Remote Sensing II, 1076906 (18 September 2018); https://doi.org/10.1117/12.2320911

[3] Robert Wright, Paul Lucey, Luke Flynn, Miguel Nunes, Thomas George, Sarath Gunapala, David Ting, Sir Rafol, "HYTI: Thermal Hyperspectral Imaging From a Cubesat Platform" Proceedings of the AIAA/USU Conference on Small Satellites, Instruments/Science I, SSC19-WKIV-02, https://digitalcommons.usu.edu/smallsat/2019/all2019/70/

[4] Alvarez, R. A., et al., 2018: Assessment of methane emissions from the U.S. oil and gas supplychain. Science, Vol 361, 186-188. https://doi.org/10.1126/science.aar7204

[5] L. Anderson, C. Swenson, A. Mastropietro, J. Sauder, 2020, "Active Thermal Architecture: Design and Status," Proceedings of the AIAA/USU Conference on Small Satellites, Advanced Concepts II, SSC20-WKIV-04. https://digitalcommons.usu.edu/smallsat/2020/all2020/23/

[6] Bruhwiler, L. M., S. Basu, P. Bergamaschi, P. Bousquet, E. Dlugokencky, S. Houweling, M. Ishizawa, H.-S. Kim, R. Locatelli, S. Maksyutov, S. Montzka, S. Pandey, P. K. Patra, G. Petron, M. Saunois, C. Sweeney, S. Schwietzke, P. Tans and E. C. Weatherhead, (2017), U.S. CH_4 emissions from oil and gas production: Have recent large increases been detected? , Journal of Geophysical Research: Atmospheres, 122, 7, 4070-4083, 10.1002/2016JD026157

[7] Dlugokencky, E. J., B.D. Hall, S.A. Montzka, G. Dutton, J. Muhle and J.W. Elkins, (2018), Longlived greenhouse gases [in "State of the Climate in 2017"], Bulletin of the American Meteorological Society, 99, 8, S46-S48, 10.1175/2018BAMSStateoftheClimate.

[8] 1IPCC, 2013: Climate Change 2013: The Physical Science Basis. Contribution of Working Group I to the Fifth Assessment Report of the Intergovernmental Panel on Climate Change [Stocker, T.F., D. Qin, G.-K. Plattner, M. Tignor, S.K. Allen, J. Boschung, A. Nauels, Y. Xia, V. Bex and P.M.
Midgley (eds.)]. Cambridge University Press, Cambridge, United Kingdom and New York, NY, USA, 1535 pp, doi:10.1017/CBO9781107415324.

[9] L. S. Anderson, C. Swenson, R. Davidson, A. Mastropietro, E. Maghsoudi, S. Luong, I. McKinley, S. Cappucci., Enabling critically cooled instrumentation via active thermal management for CubeSats: The active CryoCubeSat Project. International Cryocooler Conference, June 18-21, 2018 Burlington, VT

[10] L. Anderson, C. Swenson, R. Davidson, A. J. Mastropietro, E. Maghsoudi, S. Luong, S. Cappucci, I. Mckinley, "CubeSat active thermal management in support of cooled electro-optical instrumentation for advanced atmospheric observing missions," Proc. SPIE 10769, CubeSats and NanoSats for Remote Sensing II, 1076907 (18 September 2018);

[11] L. Anderson, C. Swenson, A. Mastropietro, J. Sauder, 2020, "Active Thermal Architecture: Design and Status," *Proceedings of the AIAA/USU Conference on Small Satellites,* Advanced Concepts II, SSC20-WKIV-04. https://digitalcommons.usu.edu/smallsat/2020/all2020/23/

[12] Bruno Mattos, Lucas Anderson, Randy Christensen, Charles Swenson, "The Active CryoCubeSat Project: System Modeling and Control Design", 2021, Proceedings of the Small Satellite Conference, SSC21-WKV-06, https://digitalcommons.usu.edu/smallsat/2021/all2021/260/

[13] Lucas Anderson, Joel Mork, Charles Swenson, Arthur Mastropietro, Jonathan Sauder, Ian Mckinley, Mason Mok, Bill Zwolinski, "The Active Thermal Architecture: Thermal Control for Small-Satellites", 2021, Proceedings of the Small Satellite Conference, SWIFT11. https://digitalcommons.usu.edu/smallsat/2021/all2021/267/

[14] Lucas Anderson, Charles Swenson, Bill Zwolinski, Pascal Erne, A.J. Mastropietro, Jonathan Sauder, Ian McKinley, Mason Mok "*CubeSat Active Thermal Control: A Review of the Active CryoCubeSat (ACCS) and Advanced Thermal Architecture (ATA) Projects*", Thermal Fluids Analysis Workshop, 2021

[15] Lucas Anderson, Joel Mork, Charles Swenson, Bill Zwolinski, A. J. Mastropietro, Jonathan Sauder, Ian McKinley, Mason Mok, "CubeSat active thermal control in support of advanced payloads: the active thermal architecture project," Proc. SPIE 11832, CubeSats and SmallSats for Remote Sensing V, 1183203 (2 August 2021); https://doi.org/10.1117/12.2594375

[16] Norfolk, M. (2022, April 11). *"Fabrisonics: How it works", https://fabrisonic.com/uam-overview/#:~:text=The%20process%20uses%20ultrasonic%20vibrations,disperses%20surface%20oxides%20and%20contaminants.*

[17] Baker, K. D., A. M. DeSpain, and J. C. Ulwick. 1966. "Simultaneous Comparison of RF Probe Techniques for Determination of Ionospheric Electron Density." Journal of Geophysical Research 71 (3): 935–44. doi:10.1029/JZ071i003p00935.

[18] Baker, K. D., J. Labelle, R. F. Pfaff, L. C. Howlett, N. B. Rao, J. C. Ulwick, and M. C. Kelley, (1985), Absolute electron density measurements in the equatorial ionosphere, J. Atmos. Terr. Phys., 781. https://doi.org/10.1016/0021-9169(85)90054-6.

[19] Barjatya, A. and C. M. Swenson (2006)., Observations of triboelectric charging effects on Langmuir-type probes in dusty plasma, J. Geophys. Res.,
doi: https://doi.org/10.1029/2006JA011806 A10302.

[20] Barjatya, A., C. M. Swenson, D. C. Thompson, and K. W. Jr. (2009), Data Analysis of the Floating Potential Measurement Unit Aboard the International Space Station, Review of Scientific Instruments, 80(4), doi:10.1063/1.3116085.

[21] Worden, J. R., Turner, A. J., Bloom, A., Kulawik, S. S., Liu, J., Lee, M., Weidner, R., Bowman, K., Frankenberg, C., Parker, R., and Payne, V. H.: Quantifying lower tropospheric

methane concentrations using GOSAT near-IR and TES thermal IR measurements, Atmos. Meas. Tech., 8, 3433–3445, https://doi.org/10.5194/amt-8-3433-2015, 2015.

[22] Ziemke, J. R., et al. (2014), Assessment and applications of NASA ozone data products derived from Aura OMI/MLS satellite measurements in context of the GMI chemical transport model, *J. Geophys. Res. Atmos.*, 119, 5671– 5699, doi:10.1002/2013JD020914.

[23] Schoeberl, MR, Douglass, AR, Newman, PA, Lait, LR, Lary, D, Waters, J, Livesey, N, Froidevaux, L, Lambert, A, Read, W, Filipiak, M & Pumphrey, H 2008, 'QBO and annual cycle variations in tropical lowerstratosphere trace gases from HALOE and Aura MLS observations', Journal of Geophysical Research, vol.113, no. D5, D05301, pp. -. https://doi.org/10.1029/2007JD008678